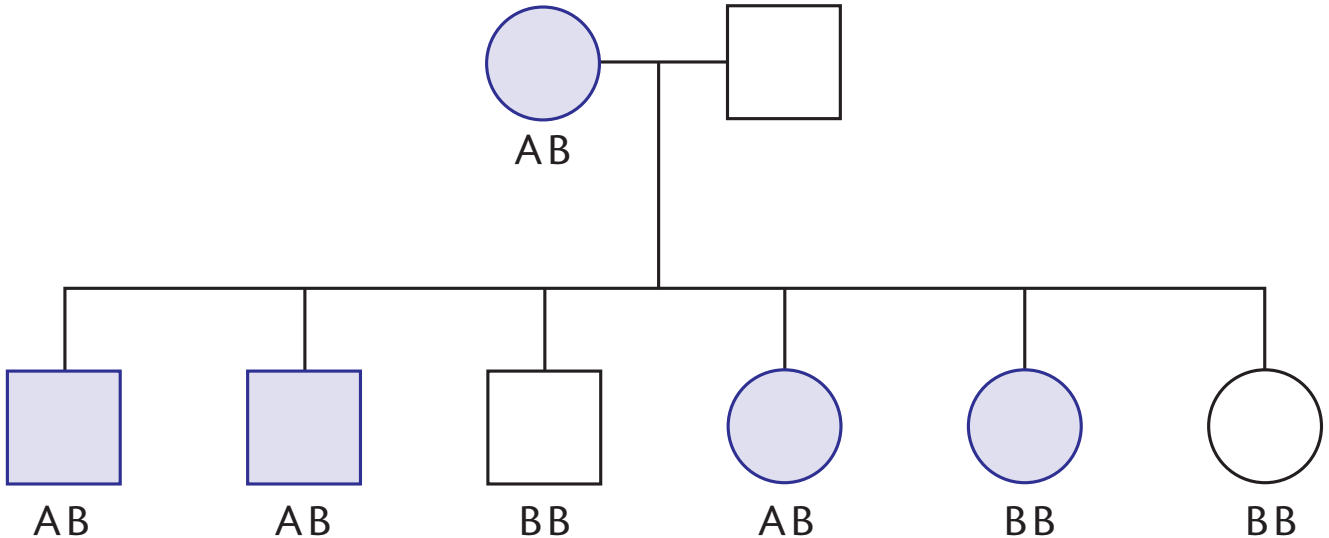

Figure 18.5 Pedigree with missing information.